imatek® CABLE

SHIELDED CONTROL CABLE

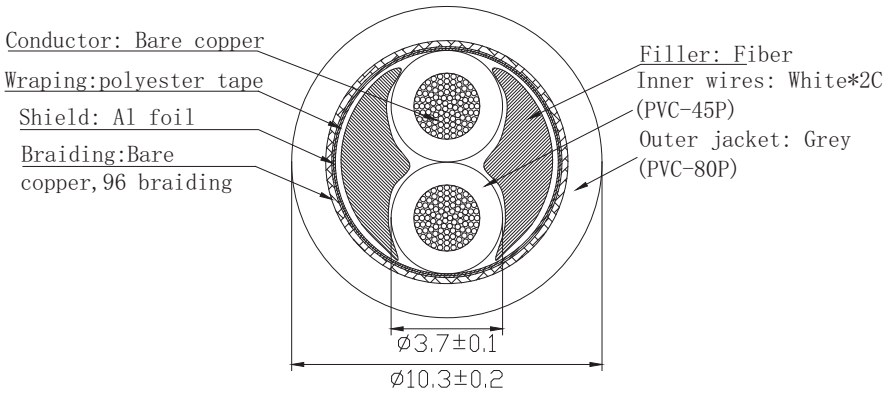

Model	No. of cores	Conductor			Insulation			Inner Diameter	Outer Jacket	Outer Diameter	Sheath Thickness	Rated Voltage	Wrapping	
		Nominal sectional area	Approx. max outer diameter	Max conductor resistance at 20°C	Material	Thickness	Min conductor resistance						Polyester tape	AL foil /Braided
			[1]		[2]				[3]					
		(mm²)	(mm)	(Ω/km)		(mm)	(mΩ/km)	(mm)		(mm)	(mm)	(KV)	Yes/No	
RVVP 2×0.5mm²	2	0.50	0.21	48.8	PVC-45P	0.5	0.012	1.9±0.1	PVC-80P	6.0±0.2	0.7	0.3/0.5	Y	Y
RVVP 3×0.5mm²	3		0.21	48.8	PVC-45P	0.5	0.012	1.9±0.1	PVC-80P	6.2±0.2	0.7	0.3/0.5	Y	Y
RVVP 4×0.5mm²	4		0.21	48.8	PVC-45P	0.5	0.012	1.9±0.1	PVC-80P	6.9±0.2	0.8	0.3/0.5	Y	Y
RVVP 5×0.5mm²	5		0.21	48.8	PVC-45P	0.5	0.012	1.9±0.1	PVC-80P	7.8±0.2	0.8	0.3/0.5	Y	Y
RVVP 6×0.5mm²	6		0.21	48.8	PVC-45P	0.5	0.012	1.9±0.1	PVC-80P	8.0±0.2	0.8	0.3/0.5	Y	Y
RVVP 7×0.5mm²	7		0.21	48.8	PVC-45P	0.5	0.012	1.9±0.1	PVC-80P	8.2±0.2	0.8	0.3/0.5	Y	Y
RVVP 8×0.5mm²	8		0.21	48.8	PVC-45P	0.5	0.012	1.9±0.1	PVC-80P	8.5±0.2	0.8	0.3/0.5	Y	Y
RVVP 10×0.5mm²	10		0.21	48.8	PVC-45P	0.5	0.012	1.9±0.1	PVC-80P	10.0±0.2	0.9	0.3/0.5	Y	Y
RVVP 12×0.5mm²	12		0.21	48.8	PVC-45P	0.5	0.012	1.9±0.1	PVC-80P	11.2±0.2	1.0	0.3/0.5	Y	Y
RVVP 16×0.5mm²	16		0.21	48.8	PVC-45P	0.5	0.012	1.9±0.1	PVC-80P	11.5±0.2	1.0	0.3/0.5	Y	Y
RVVP 20×0.5mm²	20		0.21	48.8	PVC-45P	0.5	0.012	1.9±0.1	PVC-80P	12.6±0.3	1.0	0.3/0.5	Y	Y
RVVP 30×0.5mm²	30		0.21	48.8	PVC-45P	0.5	0.012	1.9±0.1	PVC-80P	15.0±0.5	1.1	0.3/0.5	Y	Y
RVVP 2×0.75mm²	2	0.75	0.21	32.5	PVC-45P	0.6	0.011	2.35±0.1	PVC-80P	7.2±0.2	0.8	0.3/0.5	Y	Y
RVVP 3×0.75mm²	3		0.21	32.5	PVC-45P	0.6	0.011	2.35±0.1	PVC-80P	7.5±0.2	0.8	0.3/0.5	Y	Y
RVVP 3×1.5mm²	3		0.21	16.7	PVC-45P	0.7	0.01	2.95±0.1	PVC-80P	9.0±0.2	0.9	0.3/0.5	Y	Y
RVVP 4×0.75mm²	4		0.21	32.5	PVC-45P	0.6	0.011	2.35±0.1	PVC-80P	8.0±0.2	0.8	0.3/0.5	Y	Y
RVVP 5×0.75mm²	5		0.21	32.5	PVC-45P	0.6	0.011	2.35±0.1	PVC-80P	9.0±0.2	0.9	0.3/0.5	Y	Y
RVVP 6×0.75mm²	6		0.21	32.5	PVC-45P	0.6	0.011	2.35±0.1	PVC-80P	9.7±0.2	0.8	0.3/0.5	Y	Y
RVVP 7×0.75mm²	7		0.21	32.5	PVC-45P	0.6	0.011	2.35±0.1	PVC-80P	9.6±0.2	0.9	0.3/0.5	Y	Y
RVVP 10×0.75mm²	10		0.21	32.5	PVC-45P	0.6	0.011	2.35±0.1	PVC-80P	12.1±0.2	1.0	0.3/0.5	Y	Y
RVVP 12×0.75mm²	12		0.21	32.5	PVC-45P	0.6	0.011	2.35±0.1	PVC-80P	12.2±0.2	1.0	0.3/0.5	Y	Y
RVVP 20×0.75mm²	20		0.21	32.5	PVC-45P	0.6	0.011	2.35±0.1	PVC-80P	15.0±0.5	1.1	0.3/0.5	Y	Y
RVVP 30×0.75mm²	30		0.21	32.5	PVC-45P	0.6	0.011	2.35±0.1	PVC-80P	18.0±0.5	1.1	0.3/0.5	Y	Y

[1] Bare copper, max outer diameter of each copper wire is 0.21mm
[2] PVC-45P (wear resistant, weather resistant, oil resistant and cold resistant)
[3] Grey, PVC-80P (wear resistant, weather resistant, oil resistant and cold resistant)

SHIELDED CONTROL CABLE

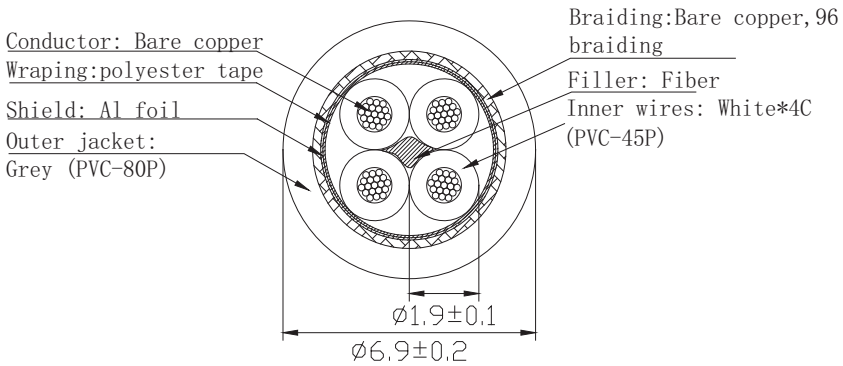

Model	No. of cores	Conductor			Insulation			Inner Diameter	Outer Jacket	Outer Diameter	Sheath Thickness	Rated Voltage	Wrapping	
		Nominal sectional area	Approx. max outer diameter	Max conductor resistance at 20°C	Material	Thickness	Min conductor resistance						Polyester tape	AL foil /Braided
			[1]		[2]				[3]					
		(mm²)	(mm)	(Ω/km)		(mm)	(mΩ/km)	(mm)		(mm)	(mm)	(KV)	Yes/No	
RVVP 2×1.0mm²	2	1.0	0.21	24.4	PVC-45P	0.6	0.01	2.5±0.1	PVC-80P	7.2±0.2	0.7	0.3/0.5	Y	Y
RVVP 3×1.0mm²	3		0.21	24.4	PVC-45P	0.6	0.01	2.5±0.1	PVC-80P	8.2±0.2	0.8	0.3/0.5	Y	Y
RVVP 4×1.0mm²	4		0.21	24.4	PVC-45P	0.6	0.01	2.5±0.1	PVC-80P	8.6±0.2	0.8	0.3/0.5	Y	Y
RVVP 5×1.0mm²	5		0.21	24.4	PVC-45P	0.6	0.01	2.5±0.1	PVC-80P	9.6±0.2	0.9	0.3/0.5	Y	Y
RVVP 6×1.0mm²	6		0.21	24.4	PVC-45P	0.6	0.01	2.5±0.1	PVC-80P	10.1±0.2	0.8	0.3/0.5	Y	Y
RVVP 7×1.0mm²	7		0.21	24.4	PVC-45P	0.6	0.01	2.5±0.1	PVC-80P	10.1±0.2	0.8	0.3/0.5	Y	Y
RVVP 8×1.0mm²	8		0.21	24.4	PVC-45P	0.6	0.01	2.5±0.1	PVC-80P	10.9±0.2	0.8	0.3/0.5	Y	Y
RVVP 10×1.0mm²	10		0.21	24.4	PVC-45P	0.6	0.01	2.5±0.1	PVC-80P	12.6±0.3	1.0	0.3/0.5	Y	Y
RVVP 12×1.0mm²	12		0.21	24.4	PVC-45P	0.6	0.01	2.5±0.1	PVC-80P	13.4±0.3	1.0	0.3/0.5	Y	Y
RVVP 2×1.25mm²	2	1.25	0.21	19.5	PVC-45P	0.6	0.01	2.7±0.1	PVC-80P	7.8±0.2	0.8	0.3/0.5	Y	Y
RVVP 3×1.25mm²	3		0.21	19.5	PVC-45P	0.6	0.01	2.7±0.1	PVC-80P	8.5±0.2	1.0	0.3/0.5	Y	Y
RVVP 4×1.25mm²	4		0.21	19.5	PVC-45P	0.6	0.01	2.7±0.1	PVC-80P	8.8±0.2	0.8	0.3/0.5	Y	Y
RVVP 5×1.25mm²	5		0.21	19.5	PVC-45P	0.6	0.01	2.7±0.1	PVC-80P	10.0±0.2	0.9	0.3/0.5	Y	Y
RVVP 6×1.25mm²	6		0.21	19.5	PVC-45P	0.6	0.01	2.7±0.1	PVC-80P	10.3±0.2	0.8	0.3/0.5	Y	Y
RVVP 7×1.25mm²	7		0.21	19.5	PVC-45P	0.6	0.01	2.7±0.1	PVC-80P	11.2±0.2	0.8	0.3/0.5	Y	Y
RVVP 8×1.25mm²	8		0.21	19.5	PVC-45P	0.6	0.01	2.7±0.1	PVC-80P	11.2±0.2	0.8	0.3/0.5	Y	Y
RVVP 10×1.25mm²	10		0.21	19.5	PVC-45P	0.6	0.01	2.7±0.1	PVC-80P	13.5±0.3	1.0	0.3/0.5	Y	Y
RVVP 12×1.25mm²	12		0.21	19.5	PVC-45P	0.6	0.01	2.7±0.1	PVC-80P	13.9±0.3	1.0	0.3/0.5	Y	Y
RVVP 20×1.25mm²	20		0.21	19.5	PVC-45P	0.6	0.01	2.7±0.1	PVC-80P	17.0±0.3	1.1	0.3/0.5	Y	Y
RVVP 2×1.5mm²	2	1.5	0.21	16.7	PVC-45P	0.7	0.01	2.95±0.1	PVC-80P	8.5±0.2	0.9	0.3/0.5	Y	Y
RVVP 4×1.5mm²	4		0.21	16.7	PVC-45P	0.7	0.01	2.95±0.1	PVC-80P	10.0±0.2	1.0	0.3/0.5	Y	Y
RVVP 5×1.5mm²	5		0.21	16.7	PVC-45P	0.7	0.01	2.95±0.1	PVC-80P	11.0±0.2	1.0	0.3/0.5	Y	Y
RVVP 6×1.5mm²	6		0.21	16.7	PVC-45P	0.7	0.01	2.95±0.1	PVC-80P	11.8±0.2	1.1	0.3/0.5	Y	Y
RVVP 8×1.5mm²	8		0.21	16.7	PVC-45P	0.7	0.01	2.95±0.1	PVC-80P	12.8±0.2	1.1	0.3/0.5	Y	Y
RVVP 10×1.5mm²	10		0.21	16.7	PVC-45P	0.7	0.01	2.95±0.1	PVC-80P	14.5±0.3	1.0	0.3/0.5	Y	Y
RVVP 12×1.5mm²	12		0.21	16.7	PVC-45P	0.7	0.01	2.95±0.1	PVC-80P	15.2±0.5	1.1	0.3/0.5	Y	Y
RVVP 2×2.5mm²	2	2.5	0.21	10.4	PVC-45P	0.8	0.01	3.7±0.1	PVC-80P	10.3±0.2	1.1	0.3/0.5	Y	Y
RVVP 3×2.5mm²	3		0.21	10.4	PVC-45P	0.8	0.01	3.7±0.1	PVC-80P	10.8±0.2	1.1	0.3/0.5	Y	Y
RVVP 4×2.5mm²	4		0.21	10.4	PVC-45P	0.8	0.01	3.7±0.1	PVC-80P	11.3±0.2	0.9	0.3/0.5	Y	Y
RVVP 5×2.5mm²	5		0.21	10.4	PVC-45P	0.8	0.01	3.7±0.1	PVC-80P	13.0±0.3	1.1	0.3/0.5	Y	Y

[1] Bare copper, max outer diameter of each copper wire is 0.21mm
[2] PVC-45P (wear resistant, weather resistant, oil resistant and cold resistant)
[3] Grey, PVC-80P (wear resistant, weather resistant, oil resistant and cold resistant)

UNSHIELDED CONTROL CABLE

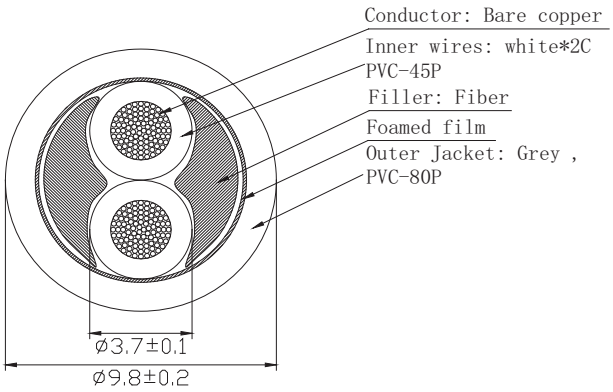

Model	No. of cores	Conductor			Insulation			Inner Diameter	Outer Jacket	Outer Diameter	Sheath Thickness	Rated Voltage
		Nominal sectional area	Approx. max outer diameter	Max conductor resistance at 20 °C	Material	Thickness	Min resistance					
			[1]		[2]				[3]			
		(mm²)	(mm)	(Ω/km)		(mm)	(mΩ/km)	(mm)		(mm)	(mm)	(KV)
RW 2×0.5mm²	2	0.50	0.21	48.8	PVC-45P	0.5	0.012	1.9±0.1	PVC-80P	6.0±0.2	0.8	0.3/0.5
RW 3×0.5mm²	3		0.21	48.8	PVC-45P	0.5	0.012	1.9±0.1	PVC-80P	6.2±0.2	0.8	0.3/0.5
RW 4×0.5mm²	4		0.21	48.8	PVC-45P	0.5	0.012	1.9±0.1	PVC-80P	6.9±0.2	0.8	0.3/0.5
RW 5×0.5mm²	5		0.21	48.8	PVC-45P	0.5	0.012	1.9±0.1	PVC-80P	7.5±0.2	0.8	0.3/0.5
RW 6×0.5mm²	6		0.21	48.8	PVC-45P	0.5	0.012	1.9±0.1	PVC-80P	8.0±0.2	0.8	0.3/0.5
RW 7×0.5mm²	7		0.21	48.8	PVC-45P	0.5	0.012	1.9±0.1	PVC-80P	8.0±0.2	0.8	0.3/0.5
RW 8×0.5mm²	8		0.21	48.8	PVC-45P	0.5	0.012	1.9±0.1	PVC-80P	8.6±0.2	0.8	0.3/0.5
RW 10×0.5mm²	10		0.21	48.8	PVC-45P	0.5	0.012	1.9±0.1	PVC-80P	10.0±0.2	0.9	0.3/0.5
RW 12×0.5mm²	12		0.21	48.8	PVC-45P	0.5	0.012	1.9±0.1	PVC-80P	10.0±0.2	0.8	0.3/0.5
RW 20×0.5mm²	20		0.21	48.8	PVC-45P	0.5	0.012	1.9±0.1	PVC-80P	12.2±0.2	0.9	0.3/0.5
RW 2×0.75mm²	2	0.75	0.21	32.5	PVC-45P	0.6	0.011	2.35±0.1	PVC-80P	7.2±0.2	0.8	0.3/0.5
RW 3×0.75mm²	3		0.21	32.5	PVC-45P	0.6	0.011	2.35±0.1	PVC-80P	7.5±0.2	0.8	0.3/0.5
RW 4×0.75mm²	4		0.21	32.5	PVC-45P	0.6	0.011	2.35±0.1	PVC-80P	8.0±0.2	0.8	0.3/0.5
RW 5×0.75mm²	5		0.21	32.5	PVC-45P	0.6	0.011	2.35±0.1	PVC-80P	8.6±0.2	0.8	0.3/0.5
RW 6×0.75mm²	6		0.21	32.5	PVC-45P	0.6	0.011	2.35±0.1	PVC-80P	9.7±0.2	0.9	0.3/0.5
RW 7×0.75mm²	7		0.21	32.5	PVC-45P	0.6	0.011	2.35±0.1	PVC-80P	9.3±0.2	0.9	0.3/0.5
RW 8×0.75mm²	8		0.21	32.5	PVC-45P	0.6	0.011	2.35±0.1	PVC-80P	10.0±0.2	0.9	0.3/0.5
RW 10×0.75mm²	10		0.21	32.5	PVC-45P	0.6	0.011	2.35±0.1	PVC-80P	11.5±0.2	0.8	0.3/0.5
RW 12×0.75mm²	12		0.21	34.0	PVC-45P	0.6	0.011	2.35±0.1	PVC-80P	12.0±0.3	0.8	0.3/0.5
RW 20×0.75mm²	20		0.21	32.5	PVC-45P	0.6	0.011	2.35±0.1	PVC-80P	14.5±0.3	1.0	0.3/0.5
RW 30×0.75mm²	30		0.21	32.5	PVC-45P	0.6	0.011	2.35±0.1	PVC-80P	18.0±0.5	1.0	0.3/0.5
RW 2×1.0mm²	2	1.00	0.21	24.4	PVC-45P	0.6	0.01	2.5±0.1	PVC-80P	7.0±0.2	0.8	0.3/0.5
RW 3×1.0mm²	3		0.21	24.4	PVC-45P	0.6	0.01	2.5±0.1	PVC-80P	8.0±0.2	0.9	0.3/0.5
RW 4×1.0mm²	4		0.21	24.4	PVC-45P	0.6	0.01	2.5±0.1	PVC-80P	8.3±0.2	0.8	0.3/0.5
RW 5×1.0mm²	5		0.21	24.4	PVC-45P	0.6	0.01	2.5±0.1	PVC-80P	9.5±0.2	0.8	0.3/0.5
RW 6×1.0mm²	6		0.21	24.4	PVC-45P	0.6	0.01	2.5±0.1	PVC-80P	9.8±0.2	0.8	0.3/0.5
RW 7×1.0mm²	7		0.21	24.4	PVC-45P	0.6	0.01	2.5±0.1	PVC-80P	9.8±0.2	0.8	0.3/0.5
RW 8×1.0mm²	8		0.21	24.4	PVC-45P	0.6	0.01	2.5±0.1	PVC-80P	10.8±0.3	0.8	0.3/0.5
RW 10×1.0mm²	10		0.21	24.4	PVC-45P	0.6	0.01	2.5±0.1	PVC-80P	12.3±0.3	0.8	0.3/0.5
RW 12×1.0mm²	12		0.21	24.4	PVC-45P	0.6	0.01	2.5±0.1	PVC-80P	13.2±0.3	0.8	0.3/0.5

[1] Bare copper, max outer diameter of each copper wire is 0.21mm
[2] PVC-45P (wear resistant, weather resistant, oil resistant and cold resistant)
[3] Grey, PVC-80P (wear resistant, weather resistant, oil resistant and cold resistant)

UNSHIELDED CONTROL CABLE

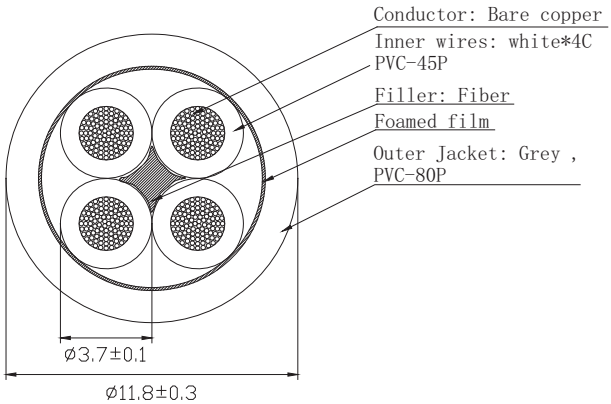

Model	No. of cores	Conductor			Insulation			Inner Diameter	Outer Jacket	Outer Diameter	Sheath Thickness	Rated Voltage
		Nominal sectional area	Approx. max outer diameter	Max conductor resistance at 20 °C	Material	Thickness	Min resistance					
			[1]		[2]				[3]			
		(mm²)	(mm)	(Ω/km)		(mm)	(mΩ/km)	(mm)		(mm)	(mm)	(KV)
RW 2×1.25mm²	2	1.25	0.21	19.5	PVC-45P	0.6	0.01	2.7±0.1	PVC-80P	7.8±0.2	0.8	0.3/0.5
RW 3×1.25mm²	3		0.21	19.5	PVC-45P	0.6	0.01	2.7±0.1	PVC-80P	8.5±0.2	0.9	0.3/0.5
RW 4×1.25mm²	4		0.21	19.5	PVC-45P	0.6	0.01	2.7±0.1	PVC-80P	8.8±0.2	0.8	0.3/0.5
RW 5×1.25mm²	5		0.21	19.5	PVC-45P	0.6	0.01	2.7±0.1	PVC-80P	10.5±0.2	0.8	0.3/0.5
RW 6×1.25mm²	6		0.21	19.5	PVC-45P	0.6	0.01	2.7±0.1	PVC-80P	10.3±0.2	0.8	0.3/0.5
RW 7×1.25mm²	7		0.21	19.5	PVC-45P	0.6	0.01	2.7±0.1	PVC-80P	10.3±0.2	0.8	0.3/0.5
RW 8×1.25mm²	8		0.21	19.5	PVC-45P	0.6	0.01	2.7±0.1	PVC-80P	11.2±0.3	0.8	0.3/0.5
RW 10×1.25mm²	10		0.21	19.5	PVC-45P	0.6	0.01	2.7±0.1	PVC-80P	13.0±0.3	0.8	0.3/0.5
RW 12×1.25mm²	12		0.21	19.5	PVC-45P	0.6	0.01	2.7±0.1	PVC-80P	13.9±0.3	0.8	0.3/0.5
RW 20×1.25mm²	20		0.21	19.5	PVC-45P	0.6	0.01	2.7±0.1	PVC-80P	17.0±0.5	1.1	0.3/0.5
RW 30×1.25mm²	30		0.21	19.5	PVC-45P	0.6	0.01	2.7±0.1	PVC-80P	20.0±0.5	1.1	0.3/0.5
RW 2×1.5mm²	2	1.50	0.21	16.7	PVC-45P	0.7	0.01	2.95±0.1	PVC-80P	8.5±0.2	0.8	0.3/0.5
RW 3×1.5mm²	3		0.21	16.7	PVC-45P	0.7	0.01	2.95±0.1	PVC-80P	9.0±0.2	0.9	0.3/0.5
RW 4×1.5mm²	4		0.21	16.7	PVC-45P	0.7	0.01	2.95±0.1	PVC-80P	9.8±0.3	0.9	0.3/0.5
RW 5×1.5mm²	5		0.21	16.7	PVC-45P	0.7	0.01	2.95±0.1	PVC-80P	10.5±0.2	1.0	0.3/0.5
RW 6×1.5mm²	6		0.21	16.7	PVC-45P	0.7	0.01	2.95±0.1	PVC-80P	11.5±0.3	1.1	0.3/0.5
RW 7×1.5mm²	7		0.21	16.7	PVC-45P	0.7	0.01	2.95±0.1	PVC-80P	11.5±0.3	1.1	0.3/0.5
RW 10×1.5mm²	10		0.21	16.7	PVC-45P	0.7	0.01	2.95±0.1	PVC-80P	14.5±0.5	1.0	0.3/0.5
RW 12×1.5mm²	12		0.21	16.7	PVC-45P	0.7	0.01	2.95±0.1	PVC-80P	15.2±0.5	1.1	0.3/0.5
RW 2×2.5mm²	2	2.50	0.21	10.4	PVC-45P	0.8	0.009	3.7±0.1	PVC-80P	9.8±0.2	0.8	0.3/0.5
RW 3×2.5mm²	3		0.21	10.4	PVC-45P	0.8	0.009	3.7±0.1	PVC-80P	10.6±0.2	0.9	0.3/0.5
RW 4×2.5mm²	4		0.21	10.4	PVC-45P	0.8	0.009	3.7±0.1	PVC-80P	11.8±0.3	1.0	0.3/0.5
RW 5×2.5mm²	5		0.21	10.4	PVC-45P	0.8	0.009	3.7±0.1	PVC-80P	13.0±0.3	1.1	0.3/0.5

[1] Bare copper, max outer diameter of each copper wire is 0.21mm
[2] PVC-45P (wear resistant, weather resistant, oil resistant and cold resistant)
[3] Grey, PVC-80P (wear resistant, weather resistant, oil resistant and cold resistant)

POWER CABLE

No. of cores x Nominal cross selection	Nominal thickness of insulation	Nominal thickness of sheath	Approx. overall diameter		Max conductor resistance at 20°C		Min. insulation Resistance at 70°C
			Lower limit	Upper limit	Copper	Tinned copper	
(mm²)	(mm)	(mm)	(mm)		(Ω/km)		(mΩ/km)
2 x 0.5	0.5	0.6	4.6	5.9	39.0	40.1	0.012
2 x 0.75	0.6	0.8	5.7	7.2	26.0	26.7	0.011
2 x 1.0	0.6	0.8	5.9	7.5	19.5	20.0	0.010
2 x 1.5	0.7	0.8	6.8	8.6	13.3	13.7	0.010
2 x 2.5	0.8	1.0	8.4	10.6	7.98	8.21	0.009
3 x 0.5	0.5	0.6	4.9	6.3	39.0	40.1	0.012
3 x 0.75	0.6	0.8	6.0	7.6	26.0	26.7	0.011
3 x 1.0	0.6	0.8	6.3	8.0	19.5	20.0	0.010
3 x 1.5	0.7	0.9	7.4	9.4	13.3	13.7	0.010
3 x 2.5	0.8	1.1	9.2	11.4	7.98	8.21	0.009
4 x 0.75	0.6	0.8	6.6	8.3	26.0	26.7	0.011
4 x 1.0	0.6	0.9	7.1	9.0	19.5	20.0	0.010
4 x 1.5	0.7	1.0	8.4	10.5	13.3	13.7	0.010
4 x 2.5	0.8	1.1	10.1	12.5	7.98	8.21	0.009
2 x 4.0	0.8	1.1	10.0	12.4	4.95	5.09	0.007
2 x 6.0	0.8	1.1	12.5	14.5	3.3	3.39	0.008
2 x 10.0	1.0	1.2	13.0	15.0	1.91	1.95	0.0056
3 x 4.0	0.8	1.2	10.8	13.5	4.95	5.09	0.007
3 x 6.0	0.8	1.2	12.4	14.0	3.3	3.39	0.007
4 x 4.0	0.8	1.2	11.8	14.6	4.95	5.09	0.007
4 x 6.0	0.8	1.2	14.0	16.0	3.3	3.39	0.006
4 x 10.0	1.0	1.4	17.3	19.0	1.91	1.95	0.0056

Nominal cross selection	Minimum number of stranded wires	Nominal thickness of insulation	Approx. overall diameter	Max conductor resistance at 20°C		Min. insulation Resistance at 70°C
			Upper limit	Copper	Tinned copper	
(mm²)		(mm)	(mm)	(Ω/km)		(mΩ/km)
0.75	7	0.6	2.9	24.5	24.8	0.013
1	7	0.8	3.1	18.1	18.2	0.012
1.5	7	0.8	3.4	12.1	12.2	0.011
2.5	19	0.8	4.1	7.4	7.6	0.011
4	19	1.0	4.8	4.61	4.7	0.009
6	19	0.6	5.3	3.08	3.11	0.0084
10	48	0.8	7.3	1.83	1.84	0.007
16	49	0.6	8.6	1.15	1.16	0.0062

RUBBER CABLE

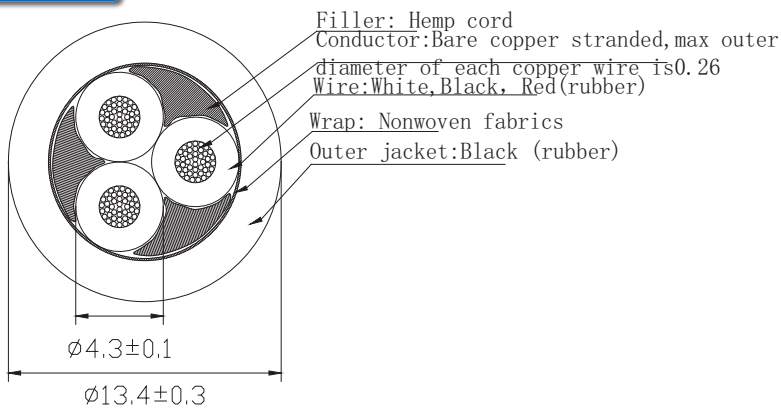

Model	No. of cores	Conductor			Insulation	Outer Jacket	Outer Diameter	Sheath Thickness	Rated Voltage
		Nominal sectional area	Approx. max outer diameter of each bare copper stranded wire	Max conductor resistance at 20°C					
		(mm²)	(mm)	(Ω/km)			(mm)	(mm)	(KV)
1×16.0mm²	1	16	0.41	1.52	Rubber	Rubber	11.0±0.2	1.9	0.3/0.5
1×25.0mm²	1	25	0.41	0.98	Rubber	Rubber	12.0±0.3	2.0	0.3/0.5
1×35.0mm²	1	35	0.41	0.69	Rubber	Rubber	13.6±0.3	2.2	0.3/0.5
1×50.0mm²	1	50	0.41	0.48	Rubber	Rubber	15.0±0.5	2.4	0.3/0.5
1×70.0mm²	1	70	0.51	0.34	Rubber	Rubber	17.5±0.5	2.6	0.3/0.5
2×1.5mm²	2	1.5	0.26	16.7	Rubber	Rubber	10.2±0.3	1.5	0.3/0.5
2×2.5mm²	2	2.5	0.26	10	Rubber	Rubber	12.5±0.3	1.7	0.3/0.5
2×4.0mm²	2	4	0.31	6.2	Rubber	Rubber	13.8±0.5	1.8	0.3/0.5
3×4.0mm²	3	4	0.31	6.2	Rubber	Rubber	15.0±0.5	2.2	0.3/0.5
3×1.5mm²	3	1.5	0.26	16.7	Rubber	Rubber	11.0±0.3	1.6	0.3/0.5
3×2.5mm²	3	2.5	0.26	10	Rubber	Rubber	13.4±0.3	1.8	0.3/0.5
3×6.0mm²	3	6	0.31	4.2	Rubber	Rubber	15.5±0.5	2.1	0.3/0.5
3×10.0mm²	3	10	0.41	2.39	Rubber	Rubber	20.2±0.5	2.5	0.3/0.5
3×16.0mm²	3	16	0.41	1.52	Rubber	Rubber	23.2±0.5	2.5	0.3/0.5
3×25.0mm²	3	25	0.41	0.98	Rubber	Rubber	29.0±0.8	3.5	0.3/0.5
3×35.0mm²	3	35	0.41	0.69	Rubber	Rubber	32.0±0.8	3.5	0.3/0.5
3×50.0mm²	3	50	0.41	0.48	Rubber	Rubber	36.5±1.0	3.8	0.3/0.5
4×1.5mm²	4	1.5	0.26	16.7	Rubber	Rubber	12.0±0.3	1.7	0.3/0.5
4×4.0mm²	4	4	0.31	6.2	Rubber	Rubber	15.6±0.5	2.0	0.3/0.5
4×6.0mm²	4	6	0.31	4.2	Rubber	Rubber	17.5±0.5	2.3	0.3/0.5
3×2.5mm²+1×1.5mm²	3	2.5	0.26	10	Rubber	Rubber	14.5±0.3	2.0	0.3/0.5
	1	1.5	0.26	16.7	Rubber	Rubber	14.5±0.3	2.0	0.3/0.5
3×4.0mm²+1×2.5mm²	3	4.0	0.31	6.2	Rubber	Rubber	16.0±0.5	2.0	0.3/0.5
	1	2.5	0.26	10	Rubber	Rubber	16.0±0.5	2.0	0.3/0.5
3×6.0mm²+1×4.0mm²	3	6.0	0.31	4.2	Rubber	Rubber	17.0±0.5	2.2	0.3/0.5
	1	4.0	0.31	6.2	Rubber	Rubber	17.0±0.5	2.2	0.3/0.5
3×10.0mm²+1×6.0mm²	3	10.0	0.41	2.39	Rubber	Rubber	21.2±0.5	2.5	0.3/0.5
	1	6.0	0.31	4.2	Rubber	Rubber	21.2±0.5	2.5	0.3/0.5
3×16.0mm²+1×10.0mm²	3	16.0	0.41	1.52	Rubber	Rubber	24.5±0.5	2.5	0.3/0.5
	1	10.0	0.41	2.39	Rubber	Rubber	24.5±0.5	2.5	0.3/0.5
3×25.0mm²+1×16.0mm²	3	25.0	0.41	0.98	Rubber	Rubber	30.8±0.8	3.5	0.3/0.5
	1	16.0	0.41	1.52	Rubber	Rubber	30.8±0.8	3.5	0.3/0.5
3×35.0mm²+1×16.0mm²	3	35.0	0.41	0.69	Rubber	Rubber	38.5±1.0	4.0	0.3/0.5
	1	16.0	0.41	1.52	Rubber	Rubber	38.5±1.0	4.0	0.3/0.5
3×50.0mm²+1×25.0mm²	3	50.0	0.41	0.48	Rubber	Rubber	43.8±1.0	4.2	0.3/0.5
	1	25.0	0.41	0.98	Rubber	Rubber	43.8±1.0	4.2	0.3/0.5

ELEVATOR CABLE

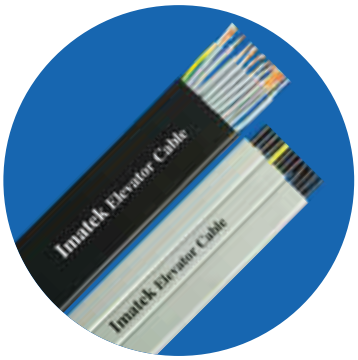

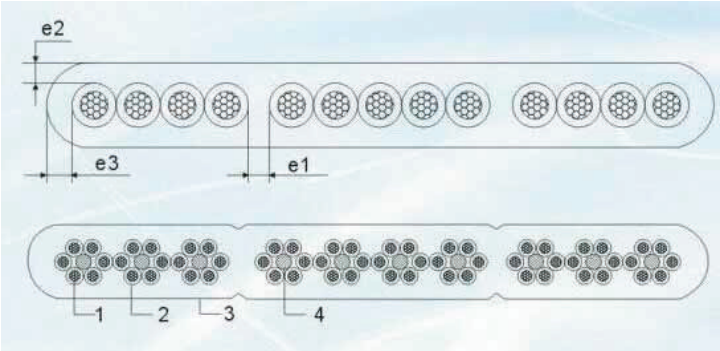

1-Copper conductor; 2-PVC insulation; 3-PVC sheath; 4-Filler

Model	No. of cores	Conductor		Insulation Material	Sheath Material	Coding		Operation temp. range		Weather Proof	High flexibility
		Nominal sectional area	Copper Purity			Color	Number	Min	Max		
		(mm²)	(%)			(Yes/No)		°C		(Yes/No)	
12×0.5mm²	12	0.50	99.97	Rubber	Rubber	Y	Y	-20	80	Y	Y
20×0.5mm²	20		99.97	Rubber	Rubber	Y	Y	-20	80	Y	Y
24×0.5mm²	24		99.97	Rubber	Rubber	Y	Y	-20	80	Y	Y
32×0.5mm²	32		99.97	Rubber	Rubber	Y	Y	-20	80	Y	Y
12×0.75mm²	12	0.75	99.97	Rubber	Rubber	Y	Y	-20	80	Y	Y
20×0.75mm²	20		99.97	Rubber	Rubber	Y	Y	-20	80	Y	Y
24×0.75mm²	24		99.97	Rubber	Rubber	Y	Y	-20	80	Y	Y
32×0.75mm²	32		99.97	Rubber	Rubber	Y	Y	-20	80	Y	Y

Model	No. of cores	Conductor		Insulation Material	Sheath Material	Coding		Operation temp. range		Weather Proof	High flexibility
		Nominal sectional area	Copper Purity			Color	Number	Min	Max		
		(mm²)	(%)			(Y es/No)		°C		(Y es/No)	
12×0.5mm²	12	0.50	99.97	PVC	PVC	Y	Y	-20	80	Y	Y
20×0.5mm²	20		99.97	PVC	PVC	Y	Y	-20	80	Y	Y
24×0.5mm²	24		99.97	PVC	PVC	Y	Y	-20	80	Y	Y
32×0.5mm²	32		99.97	PVC	PVC	Y	Y	-20	80	Y	Y
12×0.75mm²	12	0.75	99.97	PVC	PVC	Y	Y	-20	80	Y	Y
20×0.75mm²	20		99.97	PVC	PVC	Y	Y	-20	80	Y	Y
24×0.75mm²	24		99.97	PVC	PVC	Y	Y	-20	80	Y	Y
32×0.75mm²	32		99.97	PVC	PVC	Y	Y	-20	80	Y	Y

FIRE RESISTANT CABLE

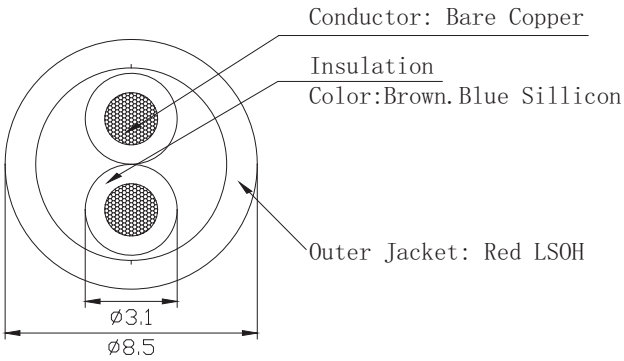

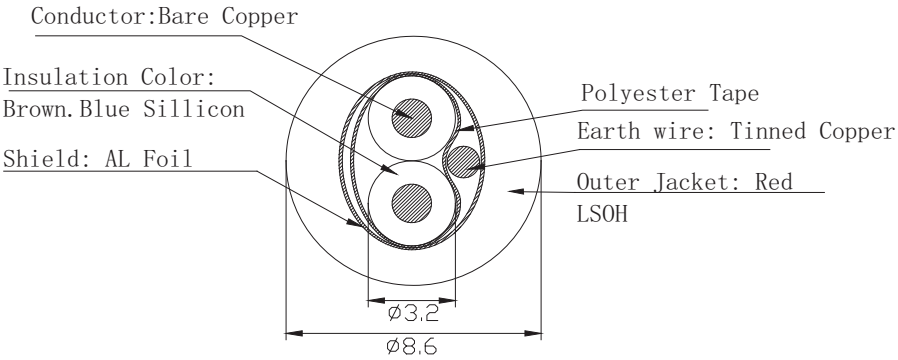

Model	No. of cores	Conductor			Insulation		Earth wire		Shield	Inner Diameter	Outer Jacket	Outer Diameter	Rated Voltage
		Nominal sectional area	No. of wires/Max. diameter of each wire	Material	Material	Color	No. of wires/Max. diameter of each wire	Material					
		(mm²)	(mm)	[1]	[2]	[3]	(mm)	[4]	[5]	(mm)		(mm)	(V)
2×1.0mm² + E	2	1.00	7/0.43	Cu	Si	[a]	7/0.18	TC	AL & Polyester	2.4±0.1	Red LSOH	7.0±0.2	300/500
2×1.5mm² + E	2	1.50	7/0.52	Cu	Si	[a]	7/0.18	TC	AL & Polyester	2.8±0.1	Red LSOH	8.15±0.2	300/500
2×2.5mm² + E	2	2.50	7/0.67	Cu	Si	[a]	7/0.25	TC	AL & Polyester	3.2±0.1	Red LSOH	8.6±0.2	300/500
3×1.0mm² + E	3	1.00	7/0.43	Cu	Si	[b]	7/0.18	TC	AL & Polyester	2.4±0.1	Red LSOH	7.2±0.2	300/500
3×1.5mm² + E	3	1.50	7/0.52	Cu	Si	[b]	7/0.18	TC	AL & Polyester	2.7±0.1	Red LSOH	8.3±0.2	300/500
3×2.5mm² + E	3	2.50	7/0.67	Cu	Si	[b]	7/0.25	TC	AL & Polyester	3.2±0.1	Red LSOH	9.5±0.2	300/500
4×1.0mm² + E	4	1.00	7/0.43	Cu	Si	[c]	7/0.18	TC	AL & Polyester	2.4±0.1	Red LSOH	7.8±0.2	300/500
4×1.5mm² + E	4	1.50	7/0.52	Cu	Si	[c]	7/0.18	TC	AL & Polyester	2.7±0.1	Red LSOH	8.6±0.2	300/500
4×2.5mm² + E	4	2.50	7/0.67	Cu	Si	[c]	7/0.25	TC	AL & Polyester	3.2±0.1	Red LSOH	10.5±0.2	300/500
2×1.0mm²	2	1	7/0.43	Cu	Si	[a]				2.4±0.1	Red LSOH	7.0±0.2	300/500
2×1.5mm²	2	1.50	7/0.52	Cu	Si	[a]				2.7±0.1	Red LSOH	7.8±0.2	300/500
2×2.5mm²	2	2.5	7/0.67	Cu	Si	[a]				3.1±0.1	Red LSOH	8.5±0.2	300/500
4×1.0mm²	4	1.00	7/0.43	Cu	Si	[c]				2.4±0.1	Red LSOH	7.8±0.2	300/500
4×1.5mm²	4	1.5	7/0.52	Cu	Si	[c]				2.7±0.1	Red LSOH	8.6±0.2	300/500
4×2.5mm²	4	2.50	7/0.67	Cu	Si	[c]				3.2±0.1	Red LSOH	10.5±0.2	300/500
3×1.0mm²	3	1	7/0.43	Cu	Si	[b]				2.4±0.1	Red LSOH	7.2±0.2	300/500
3×1.5mm²	3	1.50	7/0.52	Cu	Si	[b]				2.7±0.1	Red LSOH	8.3±0.2	300/500
3×2.5mm²	3	2.5	7/0.67	Cu	Si	[b]				3.1±0.1	Red LSOH	9.5±0.2	300/500

ALARM CABLE

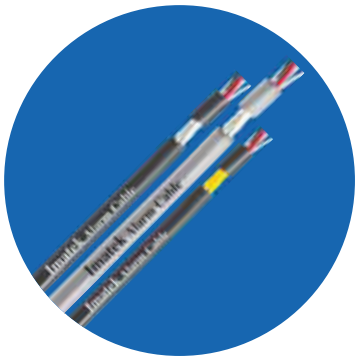

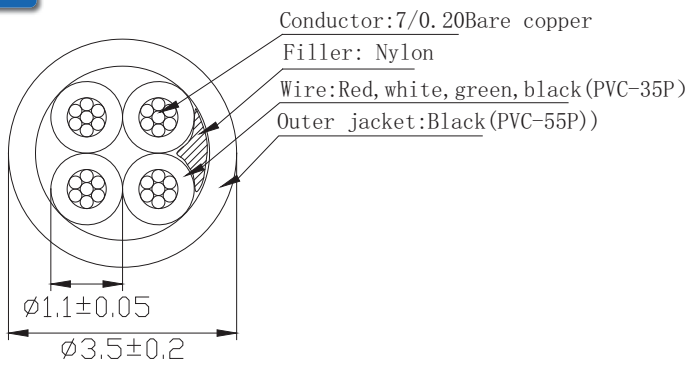

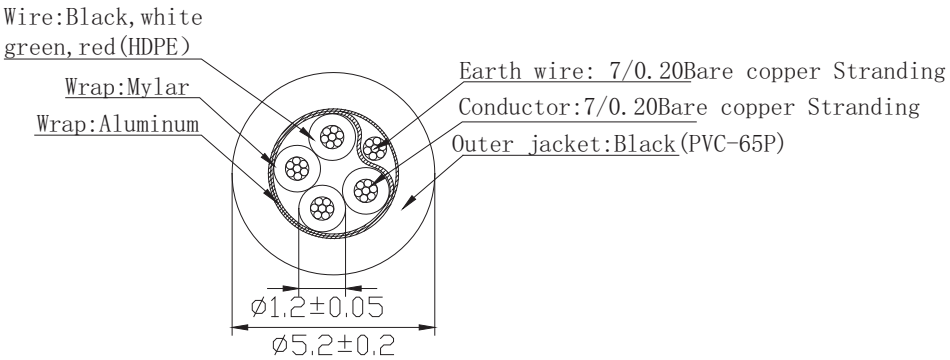

Model	No. of cores	Conductor					Insulation		Wrapping			Sheath thickness	Inner Diameter	Outer Jacket	Outer Diameter	Rated Voltage
		Nominal sectional area	No. of wires/Max. diameter of each wire	Max conductor resistance at 20°C	Min conductor resistance	Material	Material	Color	Earth wire	Shielded/Braided	Material					
		(mm²)	(mm)	(Ω/km)	(Ω/km)	[1]			(Yes/No)		[3]	(mm)	(mm)		(mm)	(V)
2×0.22mm²	2	0.22	7/0.2	92.3	0.014	Cu	PVC-35P	[2]	N	Y/N	AL	0.3	1.1±0.05	Black (PVC-55P)	3.0±0.2	300/300
4×0.22mm²	4	0.22	7/0.2	92.3	0.014	Cu	PVC-35P		N	Y/N	AL	0.3	1.1±0.05	Black (PVC-55P)	3.5±0.2	300/300
6×0.22mm²	6	0.22	7/0.2	92.3	0.014	Cu	PVC-35P		N	Y/N	AL	0.3	1.1±0.05	Black (PVC-55P)	4.2±0.2	300/300
8×0.22mm²	8	0.22	7/0.2	92.3	0.014	Cu	PVC-35P		N	Y/N	AL	0.4	1.1±0.05	Black (PVC-55P)	4.6±0.2	300/300
2×0.22mm²	2	0.22	7/0.2	92.3	0.014	Cu	HDPE		Y	Y/Y	AL	0.6	1.2±0.05	Black (PVC-65P)	4.2±0.2	300/300
4×0.22mm²	4	0.22	7/0.2	92.3	0.014	Cu	HDPE		Y	Y/Y	AL	0.8	1.2±0.05	Black (PVC-65P)	5.2±0.2	300/300
6×0.22mm²	6	0.22	7/0.2	92.3	0.014	Cu	HDPE		Y	Y/Y	AL	0.8	1.2±0.05	Black (PVC-65P)	5.5±0.2	300/300
8×0.22mm²	8	0.22	7/0.2	92.3	0.014	Cu	HDPE		Y	Y/Y	AL	0.8	1.2±0.05	Black (PVC-65P)	6.2±0.2	300/300

[1] Bare copper
[2] Different color of each core
[3] Aluminum Foil

OUTDOOR UNI-TUBE LIGHT-ARMOURED FIBRE CABLE

These cables are used for outside plant and consist of up to 12 single-mode (SM 9/125) fibre or multimode (MM 62.5/125 or MM 50/125) fibres.

This type of cable is the centre loose tube construction. The Loose Tube components are manufactured from high strength, low shrinkage PBT compound, and the tube will contain optical fibres. The loose tube also contains a thixotropic jelly, to prevent water penetration and protect the fibres against shock. A corrugated steel tape (0.15mm thick and with a 0.05mm copolymer coating on both sides) is then applied longitudinally over the loose tube. Between the steel tape and the loose tube, water-blocking material is applied to keep the cable compact and watertight. Two parallel steel wires are placed at the two sides of the steel tape. Finally the cable is completed with a black polyethylene (PE) sheath.

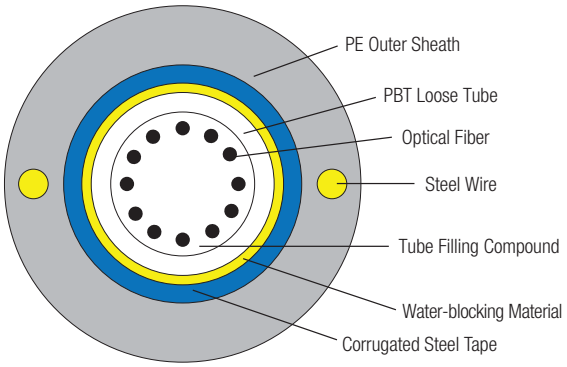

TECHNICAL PARAMETERS

Parameter		Units	Value / Details
Fibre Count			4~12
PBT Loose Tube Colour			Natural
Fibre Type			SM 9/125, MM 62.5/125 or MM 50/125
Cable Dimension		mm	11.8
Approx. Cable Weight		Kgs/km	152
Bending Radius	Dynamic		≥ 20 x Cable Diameter
	Static		≥ 10 x Cable Diameter
Tensile Strength	Installation	N	1500
	Operation	N	600
Crush Resistance (Short Term)		N/10cm	1000
Operational Temperature		°C	-30°C to +70°C
Shipping Lengths		m	2000 ± 100

Part Number	Product Description
8001 7040	IMATEK 4 Core 9/125µm SM Outdoor Light-Armored Unitube Optic Fibre Cable
8001 7041	IMATEK 6 Core 9/125µm SM Outdoor Light-Armored Unitube Optic Fibre Cable
8001 7042	IMATEK 8 Core 9/125µm SM Outdoor Light-Armored Unitube Optic Fibre Cable
8001 7043	IMATEK 12 Core 9/125µm SM Outdoor Light-Armored Unitube Optic Fibre Cable
8001 7044	IMATEK 4 Core 50/125µm MM Outdoor Light-Armored Unitube Optic Fibre Cable
8001 7045	IMATEK 6 Core 50/125µm MM Outdoor Light-Armored Unitube Optic Fibre Cable
8001 7046	IMATEK 8 Core 50/125µm MM Outdoor Light-Armored Unitube Optic Fibre Cable
8001 7047	IMATEK 12 Core 50/125µm MM Outdoor Light-Armored Unitube Optic Fibre Cable
8001 7048	IMATEK 4 Core 62.5/125µm MM Outdoor Light-Armored Unitube Optic Fibre Cable
8001 7049	IMATEK 6 Core 62.5/125µm MM Outdoor Light-Armored Unitube Optic Fibre Cable
8001 7050	IMATEK 8 Core 62.5/125µm MM Outdoor Light-Armored Unitube Optic Fibre Cable
8001 7051	IMATEK 12 Core 62.5/125µm MM Outdoor Light-Armored Unitube Optic Fibre Cable

INDOOR TIGHT BUFFERED FIBRE CABLE

These cables are used for indoor applications and consist of 4, 6, 8, 12 single-mode (SM 9/125) fibre or multimode (MM62.5/125 or MM50/125) fibres. Each fibre is coated to a 900 micron diameter, with a durable, protective material and the coating (buffer material). Each fibre is uniquely colour coded as defined in Table 1. Surrounding the group of buffered fibres are aramid yarns to provide the sufficient tensile strength to the cable, which effectively avoids damaging the cable during the installation, transports, operation etc. An outer sheath is then applied over the tight fibre / aramid assembly. The outer sheath has a flame retardant function, PVC (Riser OFNR).

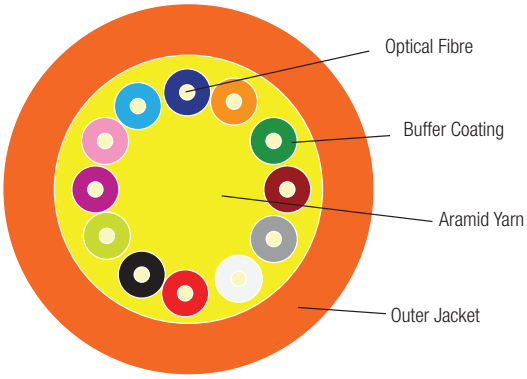

PHYSICAL SPECIFIED (TABLE 1)

4C Tight Buffered Cable

6C Tight Buffered Cable

8C Tight Buffered Cable

12C Tight Buffered Cable

TECHNICAL PARAMETERS

Parameter	Units	Value / Details			
		4C Tight Buffered Cable	6C Tight Buffered Cable	8C Tight Buffered Cable	12C Tight Buffered Cable
Fibre Count		4	6	8	12
Cable Type		PVC (Riser OFNR)			
Buffer Colours		See Table-1 relevant buffered fiber colours			
Cabled Fibre Attenuation		See Fibre Characteristics Table			
Fibre Type		SM 9/125 MM 50/125 MM 62.5/125			
Outer Sheath Colours		SM-Yellow, MM-Orange			
Buffer Diameter		0.9 ± 0.05			
Outer Diameter	mm	6.2 ± 0.2			
Outer Sheath Radial Thickness	mm	0.7	0.7	0.75	0.75
Approx. Cable Weight	Kgs/km	19	21	26	32
Bending Radius		≥ 20 x Cable Diameter ≥ 10 x Cable Diameter			
Tensile Strength (Installation)	N	660			
Crush Resistance	N/10cm	500			
Operational Temperatur	°C	-20°C to +70°C			
	m	Up to 2000			

Part Number	Product Description
8001 7004	IMATEK 4 Core 9/125µm SM Indoor Building Optic Fibre Cable
8001 7005	IMATEK 6 Core 9/125µm SM Indoor Building Optic Fibre Cable
8001 7006	IMATEK 8 Core 9/125µm SM Indoor Building Optic Fibre Cable
8001 7007	IMATEK 12 Core 9/125µm SM Indoor Building Optic Fibre Cable
8001 7008	IMATEK 4 Core 50/125µm MM Indoor Building Optic Fibre Cable
8001 7009	IMATEK 6 Core 50/125µm MM Indoor Building Optic Fibre Cable
8001 7010	IMATEK 8 Core 50/125µm MM Indoor Building Optic Fibre Cable
8001 7011	IMATEK 12 Core 50/125µm MM Indoor Building Optic Fibre Cable
8001 7012	IMATEK 4 Core 62.5/125µm MM Indoor Building Optic Fibre Cable
8001 7013	IMATEK 6 Core 62.5/125µm MM Indoor Building Optic Fibre Cable
8001 7014	IMATEK 8 Core 62.5/125µm MM Indoor Building Optic Fibre Cable
8001 7015	IMATEK 12 Core 62.5/125µm MM Indoor Building Optic Fibre Cable

Part Number	Product Description
8001 7016	IMATEK 4 Core 9/125µm SM LSZH Indoor Building Optic Fibre Cable
8001 7017	IMATEK 6 Core 9/125µm SM LSZH Indoor Building Optic Fibre Cable
8001 7018	IMATEK 8 Core 9/125µm SM LSZH Indoor Building Optic Fibre Cable
8001 7019	IMATEK 12 Core 9/125µm SM LSZH Indoor Building Optic Fibre Cable
8001 7020	IMATEK 4 Core 50/125µm MM LSZH Indoor Building Optic Fibre Cable
8001 7021	IMATEK 6 Core 50/125µm MM LSZH Indoor Building Optic Fibre Cable
8001 7022	IMATEK 8 Core 50/125µm MM LSZH Indoor Building Optic Fibre Cable
8001 7023	IMATEK 12 Core 50/125µm MM LSZH Indoor Building Optic Fibre Cable
8001 7024	IMATEK 4 Core 62.5/125µm MM LSZH Indoor Building Optic Fibre Cable
8001 7025	IMATEK 6 Core 62.5/125µm MM LSZH Indoor Building Optic Fibre Cable
8001 7026	IMATEK 8 Core 62.5/125µm MM LSZH Indoor Building Optic Fibre Cable
8001 7027	IMATEK 12 Core 62.5/125µm MM LSZH Indoor Building Optic Fibre Cable

FIBRE PATCH CORDS

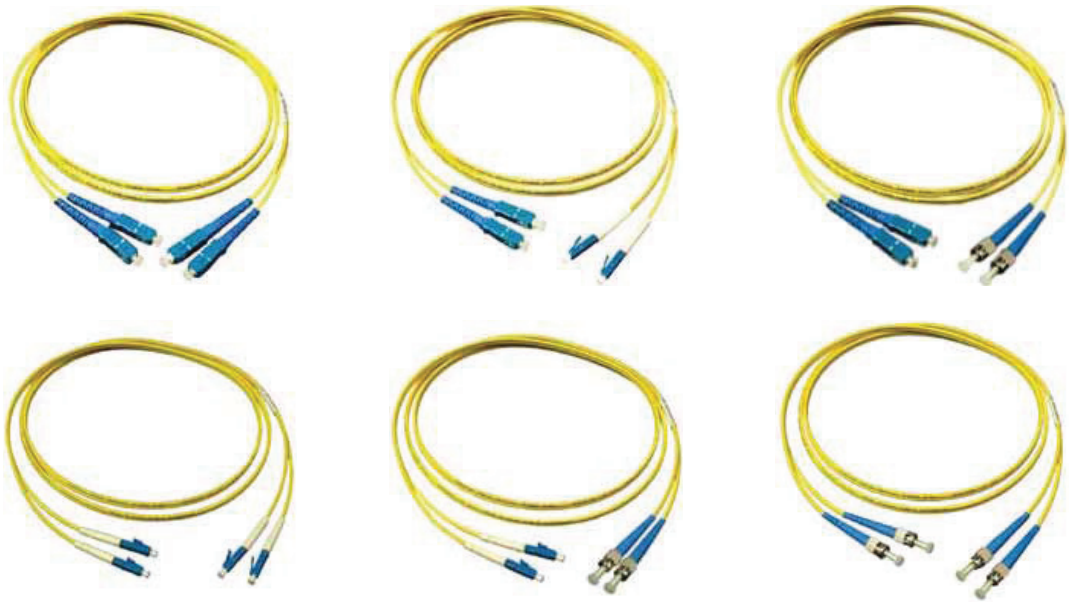

PHYSICAL SPECIFICATIONS

Coated Fibre Diameter	245µm
Cable outside Diameter	3.0mm
Simplex	3.0±0.2mm
Duplex Max	6.4±0.2mmfor 3.0mm type
Min. Bend Radius	10D (D is cable outside diameter, in static)

OPTICAL SPECIFICATIONS

Min. Bandwidth @850nm	>200MHz
@1300nm	>600MHz
Average Connection Loss	≥0.1dB
Return Loss Minimum	40dB
Cable outside Diameter	3.0mm

MECHANICAL CHARACTERISTICS

Connector	
Ferrule Materials	Zirconia
Housing Body	ABS
Cable / Boot	
Flammability	Flame resistant
Glass Core/Cladding Diameter	9/125µm, 50/125µm or 62.5/125µm
Polymer Coating Diameter	125µm
Jacket Specification fit RoHs standard, material PVC or LSOH	

ENVIRONMENTAL

Operating Temperature Range	-25°C to +70°C
StorageTemperature Range	45%--70%

PERFORMANCE

Connector	
Mean Insertion Loss	0.3dB
Maximum Insertion Loss	0.35dB
Connector Durability	>500 cycles

Part Number	Product Description
8001 6001	IMATEK SC-SC 9/125µm SM Duplex Fibre Patch Cord 3.0m
8001 6004	IMATEK SC-SC 50/125µm MM Duplex Fibre Patch Cord 3.0m
8001 6007	IMATEK SC-SC 62.5/125µm MM Duplex Fibre Patch Cord 3.0m
8001 6010	IMATEK LC-SC 9/125µm SM Duplex Fibre Patch Cord 3.0m
8001 6013	IMATEK LC-SC 50/125µm MM Duplex Fibre Patch Cord 3.0m
8001 6016	IMATEK LC-SC 62.5/125µm MM Duplex Fibre Patch Cord 3.0m
8001 6019	IMATEK SC-ST 9/125µm SM Duplex Fibre Patch Cord 3.0m
8001 6022	IMATEK SC-ST 50/125µm MM Duplex Fibre Patch Cord 3.0m
8001 6025	IMATEK SC-ST 62.5/125µm MM Duplex Fibre Patch Cord 3.0m
8001 6028	IMATEK LC-LC 9/125µm SM Duplex Fibre Patch Cord 3.0m
8001 6031	IMATEK LC-LC 50/125µm MM Duplex Fibre Patch Cord 3.0m
8001 6034	IMATEK LC-LC 62.5/125µm MM Duplex Fibre Patch Cord 3.0m
8001 6037	IMATEK LC-ST 9/125µm SM Duplex Fibre Patch Cord 3.0m
8001 6040	IMATEK LC-ST 50/125µm MM Duplex Fibre Patch Cord 3.0m
8001 6043	IMATEK LC-ST 62.5/125µm MM Duplex Fibre Patch Cord 3.0m
8001 6046	IMATEK ST-ST 9/125µm SM Duplex Fibre Patch Cord 3.0m
8001 6049	IMATEK ST-ST 50/125µm MM Duplex Fibre Patch Cord 3.0m
8001 6052	IMATEK ST-ST 62.5/125µm MM Duplex Fibre Patch Cord 3.0m

CATEGORY 3 MULTIPAIR CABLES

Imatek Category 3 multipair cable consists of solid copper conductors with 24AWG. It is generally used in voice application systems where the bandwidth is up to 16MHz. Imatek Category 3 multipair cable exceeds the requirements of TIA/EIA 568-B.2 and ISO/IEC 11801.

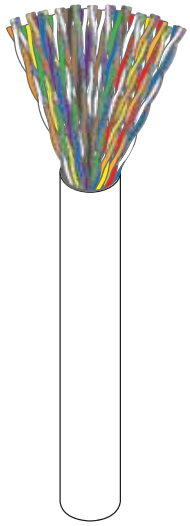

TECHNICAL DETAILS

Pairs	25, 50, 100
AWG	24
Conductor Dia. Nom. (mm)	0.50mm
Material	Solid Bare Copper
Average Thickness (mm)	0.20mm
Jacket	PVC
Conductor D.C Resistance	<9.5Ω/100m
Insulation Resistance	500MΩ
Capacitance	5.6nF/100m
Attenuation	7.8dB/M @ 1MHz
Impedance	100Ω @ 1MHz
D.C Resistance	27.0Ω/M

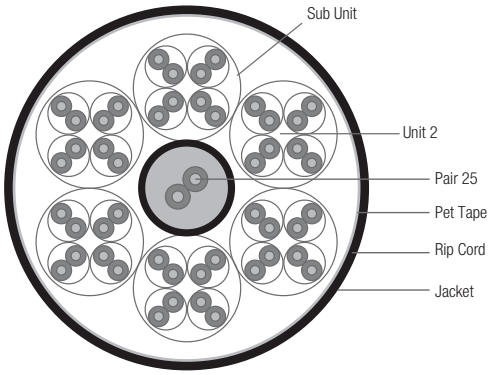

Part Number	Product Description
8000 5407	IMATEK Category 3, 25-Pair, CMR Rated, 305m, Grey
8000 5408	IMATEK Category 3, 50-Pair, CMR Rated, 305m, Grey
8000 5409	IMATEK Category 3, 100-Pair, CMR Rated, 305m, Grey
8000 5410	IMATEK Category 3, 25-Pair, CMR Rated, 500m, Grey
8000 5411	IMATEK Category 3, 50-Pair, CMR Rated, 500m, Grey
8000 5412	IMATEK Category 3, 100-Pair, CMR Rated, 500m, Grey
8000 5413	IMATEK Category 3, 25-Pair, LSZH, 305m, Grey
8000 5414	IMATEK Category 3, 50-Pair, LSZH, 305m, Grey
8000 5415	IMATEK Category 3, 100-Pair, LSZH, 305m, Grey
8000 5416	IMATEK Category 3, 25-Pair, LSZH, 500m, Grey
8000 5417	IMATEK Category 3, 50-Pair, LSZH, 500m, Grey
8000 5418	IMATEK Category 3, 100-Pair, LSZH, 500m, Grey+C8

CATEGORY 5E UTP PVC CABLES

Imatek Category 5E 4-Pair Cable consists of 24AWG solid-copper conductors insulated with high-density polyethylene. The insulated conductors are tightly twisted into pairs and covered with PVC material.

Imatek Category 5E 4-Pair Cable provides excellent high-speed transmission, is certified to 155MHz and supports application such as 155Mb/s ATM, 622Mb/s ATM and IEEE 802.3 1000 Base-T (Gigabit Ethernet) standard, using parallel transmission technology. This product is UL listed with a CMR fire rating.

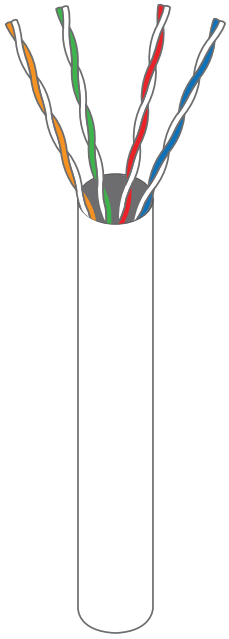

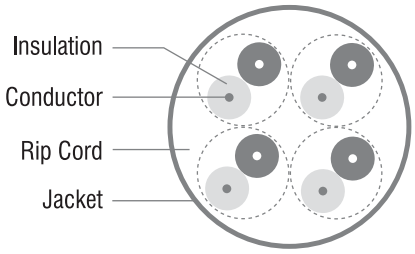

CONSTRUCTION

Conductor	Solid Bare Copper
AWG	24
Conductor Dia. Nom. (mm)	0.505
Insulation	PE
Average Thickness (mm)	0.19
Min. Point Thickness (mm)	0.16
Insulation Diameter (+/-0.10mm)	0.88
Twisting Lay Length (mm)	30 underneath
Cabling Lay Length (mm)	200 underneath
Jacket	PVC
Average Thickness (+/-0.05mm)	0.50
Min. Point Thickness (mm)	0.43
Outer Diameter (+/-0.2mm)	4.9
Rip Cord	Yes

TRANSMISSION PERFORMANCE

Frequency(MHZ)	Return Loss(dB)	Attenuation(dB/100mm)	NEXT	ACR(dB)	PSNEXT(dB)	ELFEXT(dB)	PSELFEXT(dB)	Delay(dB)
0.772	19.4	1.8	67.0	65	64.0	66.0	63.0	575.0
1	20.0	2.0	65.3	63	62.3	63.8	60.8	570.0
4	23.0	4.1	56.3	52	53.3	51.7	48.7	552.0
8	24.5	5.8	51.8	46	48.8	45.7	42.7	546.7
10	25.0	6.5	50.3	44	47.3	43.8	40.8	545.4
16	25.0	8.2	47.3	39	44.3	39.7	36.7	543.0
20	25.0	9.3	45.8	37	42.8	37.7	34.7	542.0
25	24.3	10.4	44.3	34	41.3	35.8	32.8	541.2
31.25	23.6	11.7	42.9	31	39.9	33.9	30.9	540.4
62.5	21.5	17.0	38.4	21	35.4	27.8	24.8	538.6
100	20.1	22.0	35.3	13	32.3	23.8	20.8	537.6

Part Number	Product Description
8000 5005	IMATEK Category 5E, 4-Pair, UTP, PVC, CMR Rated, 305m, Solid, Grey
8000 5006	IMATEK Category 5E, 4-Pair, UTP, PVC, CMR Rated, 305m, Stranded, Grey
8000 5007	IMATEK Category 5E, 4-Pair, UTP, PVC, LSZH, 305m, Solid, Grey
8000 5008	IMATEK Category 5E, 4-Pair, UTP, PVC, LSZH, 305m, Stranded, Grey

RG 6 BROADCAST SATELITE CABLE 3GHZ

Center Conducter :
20AWG Copper Clad Steel
Nominal Diameter 0.032” (0.81mm)

Dielectric :
Gas Expanded Polyethylene
Nominal Diameter Over Dielectric : 0.144” (3.66mm)

Shield :
1st Shield : Aluminium-Polyprorylene-Aluminium
Laminated Tape with Overlap Bonded to the Dielectric
Nominal Diameter Over Tape : 0.150” (3.82mm)
2nd Shield : 34AWG Aluminium Braid Wire 90% Coverage

Jacket :
Flame Retardant PVC Jacket
Nominal Diameter Over Jacket : 0.240” (6.10mm)
Nominal Jacket Thickness : 0.032” (0.82mm)

Electrical Properties :
Impedance : 75.0 ±3.0 Ohms
Velocity of Propagation :85% Norminal
Capacitance Conductor to Shield :16.2 pF/ft (53.1 pF/m) Nominal

Attenuation :
68 °F (20 °C)

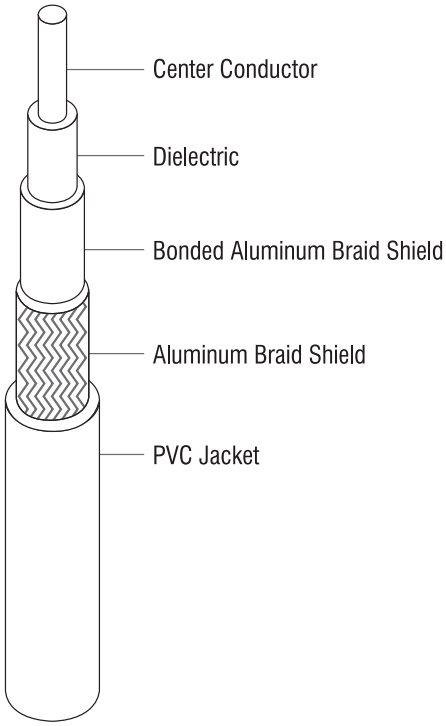

TRANSMISSION PERFORMANCE

Frequency MHz	dB/100 ft. (MAX)	dB/100meters (MAX)
5MHz	0.8dB	2.5dB
55MHz	1.8dB	6.0dB
211MHz	3.4dB	11.0dB
500MHz	5.2dB	17.1dB
750MHz	6.5dB	21.4dB
862MHz	7.0dB	22.9dB
1000MHz	7.7dB	25.2dB
1450MHz	9.3dB	30.5dB
1800MHz	10.3dB	33.8dB
2250MHz	11.9dB	39.0dB

Part Number	Product Description
8000 4301	IMATEK RG59, 2GHz, 90% Braided, CCS Grade, Coaxial Cable, 305m
8000 4302	IMATEK RG59, 2GHz, 90% Braided, CCS Grade, Coaxial Cable, 500m
8000 4303	IMATEK RG59, 2GHz, 97% Braided, CCS Grade, Coaxial Cable, 305m
8000 4304	IMATEK RG59, 2GHz, 97% Braided, CCS Grade, Coaxial Cable, 500m
8000 4305	IMATEK RG59, 2GHz, 97% Braided, Bare Copper, Coaxial Cable, 305m
8000 4306	IMATEK RG59, 2GHz, 97% Braided, Bare Copper, Coaxial Cable, 500m

RG 11 BROADCAST SATELITE CABLE 3GHZ

Center Conducter :
18AWG Copper Clad Steel
Nominal Diameter 0.040” (1.02mm)

Dielectric :
Gas Expanded Polyethylene
Nominal Diameter Over Dielectric : 0.180” (4.57mm)

Shield :
1st Shield : Aluminium-Polyprorylene-Aluminium
Laminated Tape with Overlap Bonded to the Dielectric
Nominal Diameter Over Tape : 0.186” (4.27mm)
2nd Shield : 34AWG Aluminium Braid Wire 90% Coverage

Jacket :
Flame Retardant PVC Jacket
Nominal Diameter Over Jacket : 0.272” (6.91mm)
Nominal Jacket Thickness : 0.030” (0.76mm)

Electrical Properties :
Impedance : 75.0 ±3.0 Ohms
Velocity of Propagation : 85% Norminal
Capacitance Conductor to Shield : 16.2 pF/ft (53.1 pF/m) Nominal

Attenuation :
68 ºF (20 ºC)

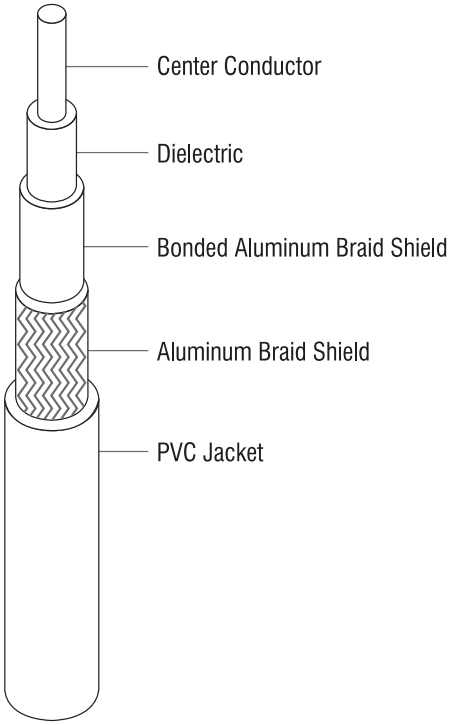

TRANSMISSION PERFORMANCE

Frequency MHz	dB/100 ft. (MAX)	dB/100meters (MAX)
5MHZ	0.50dB	1.60dB
10MHz	0.66dB	2.16dB
55MHz	1.40dB	4.60dB
100MHz	1.92dB	6.30dB
211MHz	2.60dB	8.50dB
500MHz	4.10dB	13.50dB
750MHz	5.10dB	16.70dB
862MHz	5.50dB	18.00dB
1000MHz	6.00dB	19.70dB
1200MHz	6.73dB	22.07dB
1450MHz	7.90dB	25.90dB
1800MHz	8.40dB	27.60dB
2250MHz	10.1dB	33.10dB
2800MHz	10.9dB	35.76dB
3000MHz	11.28dB	37.01dB

Part Number	Product Description
8000 4018	IMATEK RG11, 3GHz, 90% Braided, CCS Grade, Coaxial Cable, 305m
8000 4019	IMATEK RG11, 3GHz, 90% Braided, CCS Grade, Coaxial Cable, 500m
8000 4020	IMATEK RG11, 3GHz, 97% Braided, CCS Grade, Coaxial Cable, 305m
8000 4021	IMATEK RG11, 3GHz, 97% Braided, CCS Grade, Coaxial Cable, 500m
8000 4022	IMATEK RG11, 3GHz, 97% Braided, Bare Copper, Coaxial Cable, 305m
8000 4023	IMATEK RG11, 3GHz, 97% Braided, Bare Copper, Coaxial Cable, 500m